DE 619

Bath/shower mixer external parts for PD 435 with 2 outlet diverter and ABS cover plate

51 Chrome Plated

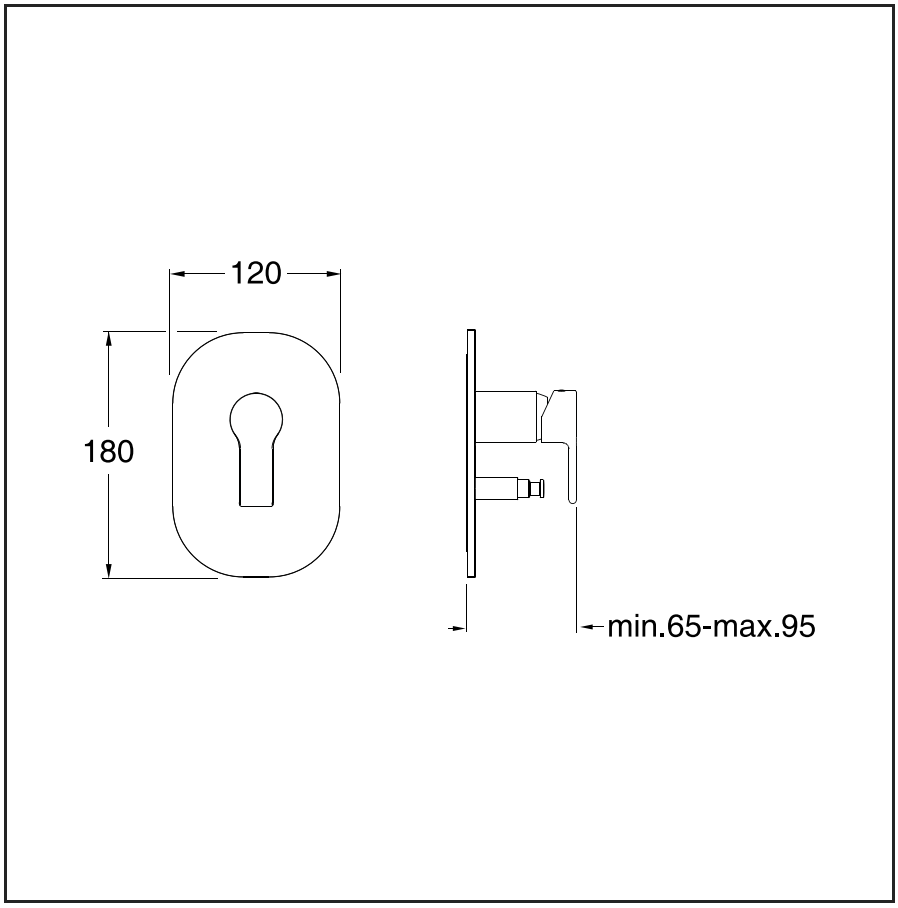

CRS SpA Via Principe Amedeo, 3 20121 Milano Italy | Headquarter Via Fava, 56 28024 Gozzano (NO) Italy
Tel. +39.0322.9545 | Fax +39.0322.863295 |
C.F e P.Iva. 00309260032 | corp. stock 928.800 I.V. | compagnie registration office 00309260032 | Rea MI1870445

09/29/2015