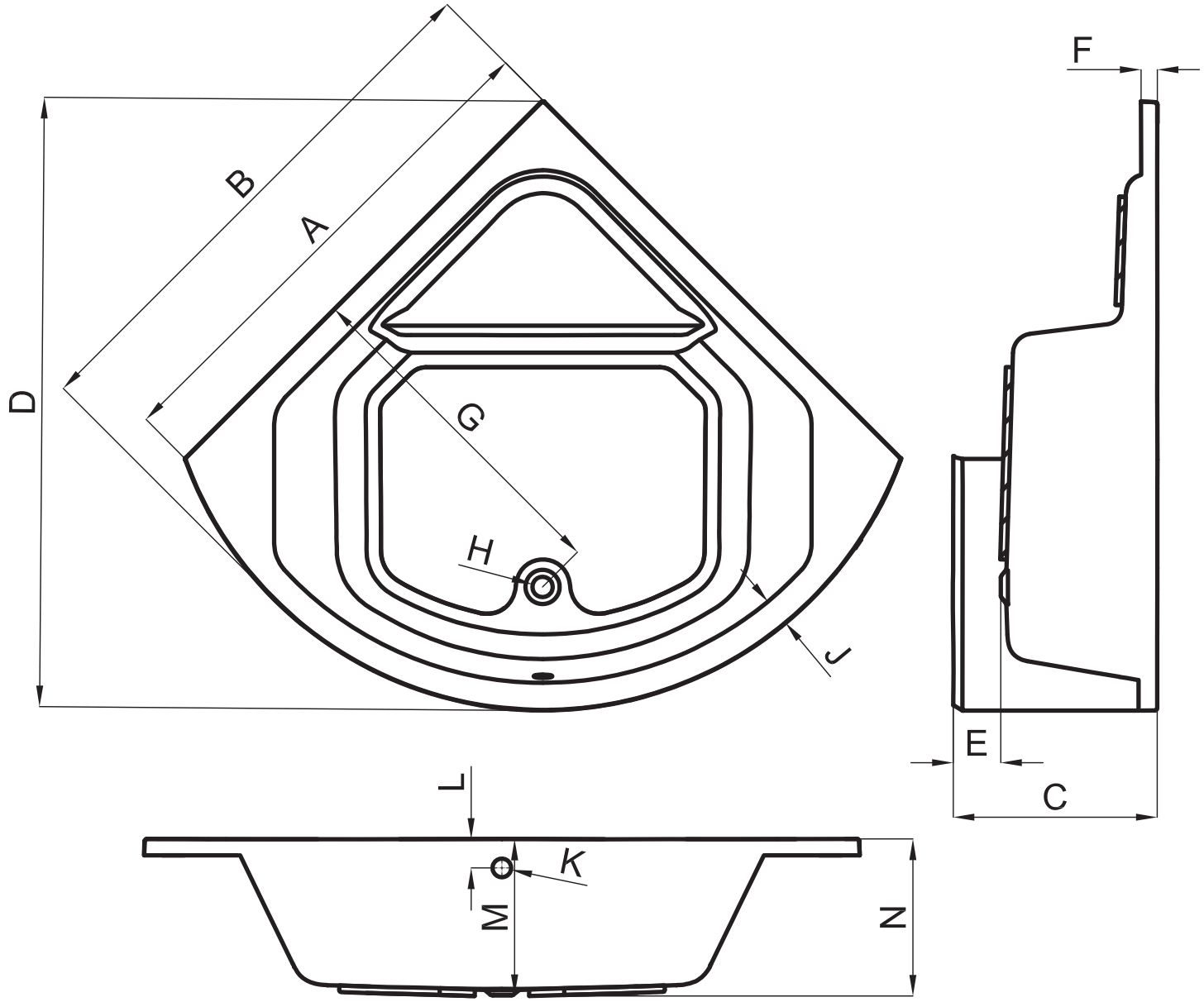

mm	A	B	C	D	E	F	G	H	I	J	K	L	M	N
1400x1400	1400	1500	565	1690	130	45	950	Ø52	1980	80	52	80	415	435