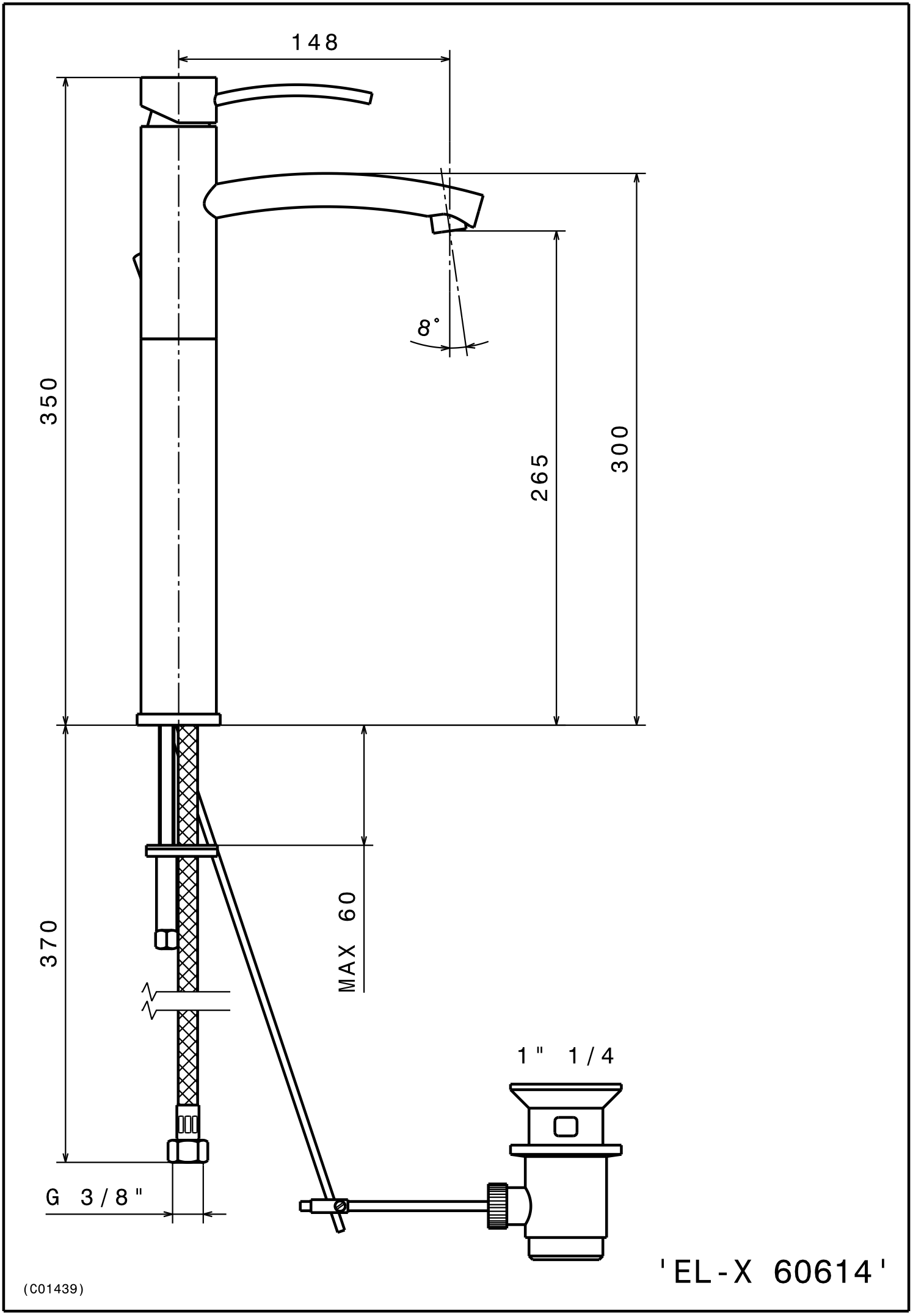
148
350
8°
265
300
370
MAX 60
1" 1/4
G 3/8"
'EL-X 60614'
(C01439)