EV 225 medium

Progressive basin mixer with 1"1/4 Up&Down waste

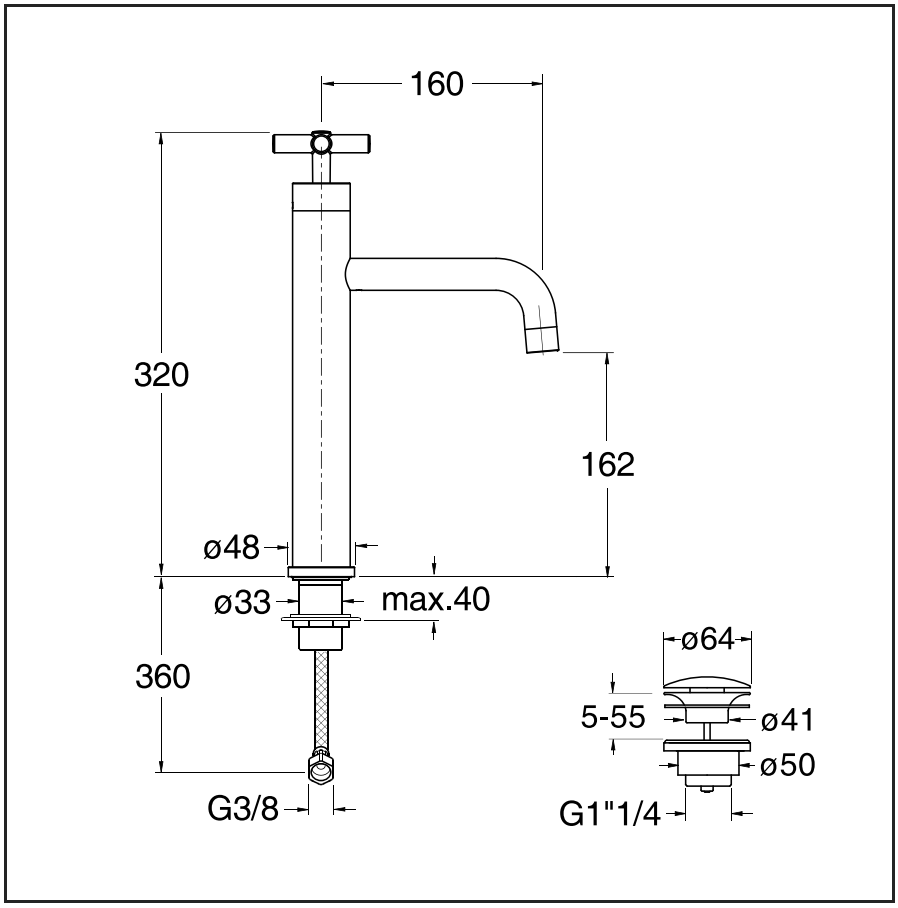

51 Chrome Plated

CERTIFICATIONS

Product available for the following certifications

ACS FR