TR 100 ld

External thermostatic bath mixer with flexible hose and anti-lime hand shower

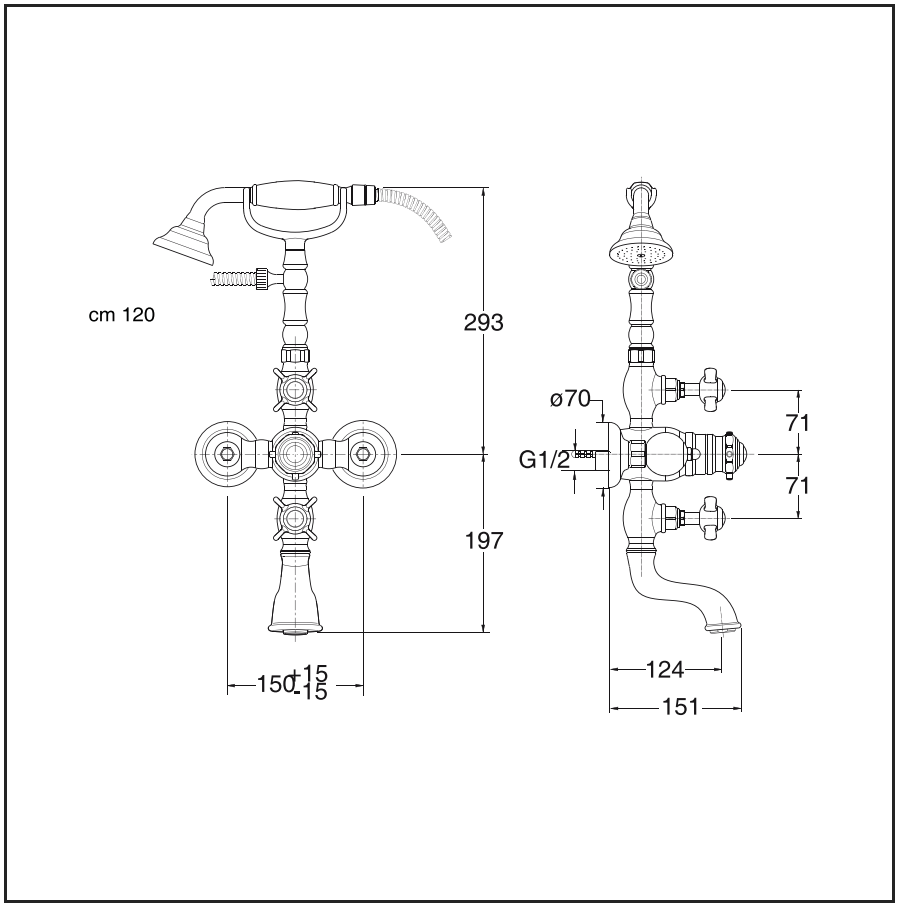

39 Chrome/Gold

51 Chrome Plated

52 Gold

90 Silver

91 Copper plated

92 Old Brass

CERTIFICATIONS

Product available for the following certifications

ACS FR

BE

CRS SpA Via Principe Amedeo, 3 20121 Milano Italy | Headquarter Via Fava, 56 28024 Gozzano (NO) Italy
Tel. +39.0322.9545 | Fax +39.0322.863295 |
C.F e P.Iva. 00309260032 | corp. stock 928.800 I.V. | compagnie registration office 00309260032 | Rea MI1870445