MH SERIES

Thermostatic shower mixer with diverter

DE: Thermostat-Brausemischer mit Umsteller
FR: mitigeur douche thermostatique avec inverseur
IT: miscelatore termostatico doccia con deviatore
RU: Термостатический смеситель для душа
ES: mezclador termostático

PRODUCT DETAILS	
Product code	VB10169C
EAN code	40 50663 09054 8
Size	w:160xd:192xh:220 (mm)
Weight	
Colour	Chrome

Weights and measurements shown may be subject to small variations or are indicative.
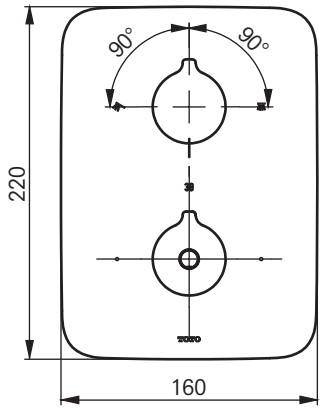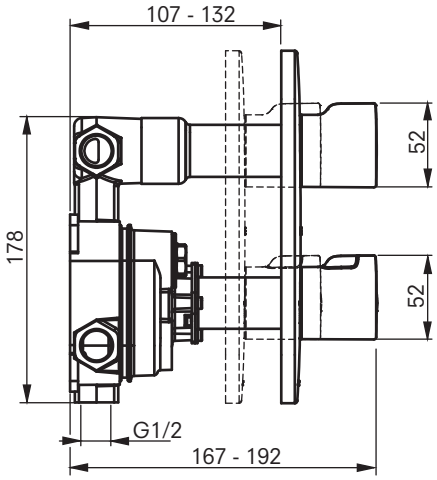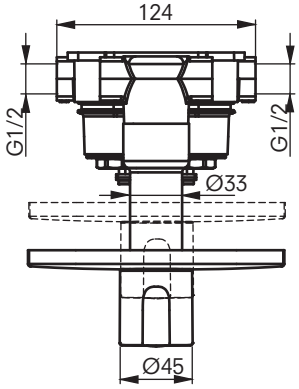
TECHNICAL DRAWINGS