ND 266

Wall mounted basin mixer external parts for PD 237 - PD 238 with 1"1/4 Up&Down waste

CRISTINA

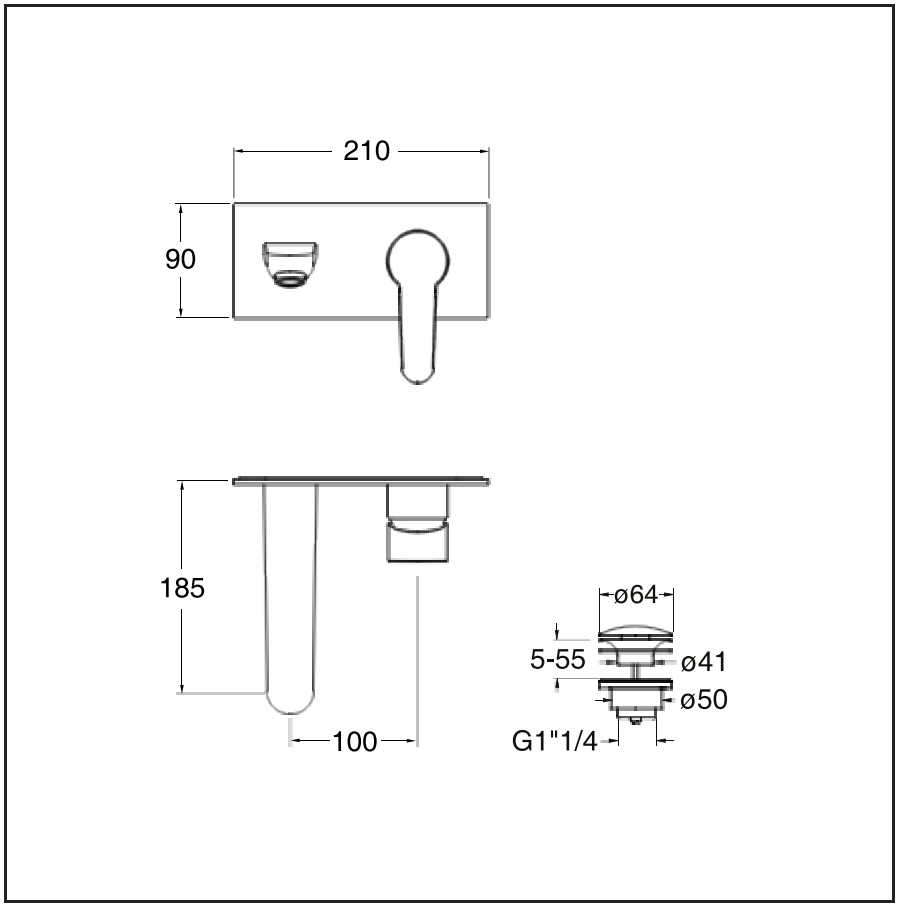

51 Chrome Plated

CERTIFICATIONS

Product available for the following certifications

ACS FR

DE