QM 321

Bidet mixer with 1"1/4 pop up waste

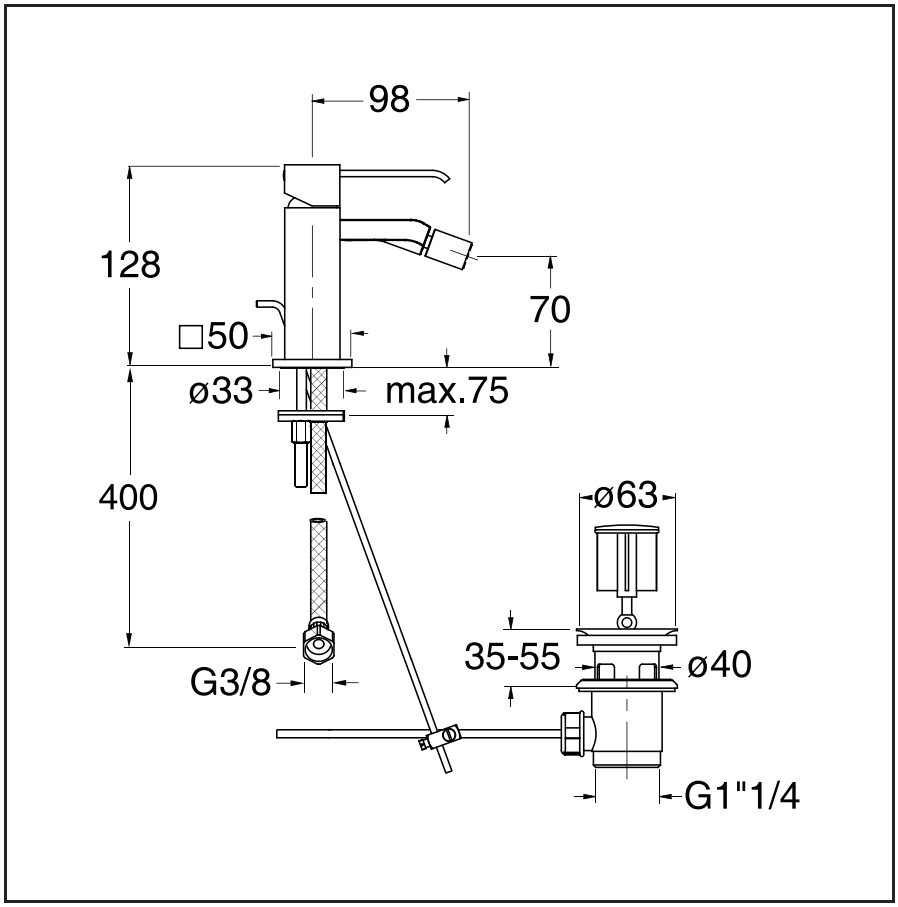

- 13 Black mat
- 24 White mat
- 52 Gold
- 51 Chrome Plated

CERTIFICATIONS

Product available for the following certifications

ACS FR | DE | NF FR | CH | DE

CRS SpA Via Principe Amedeo, 3 20121 Milano Italy | Headquarter Via Fava, 56 28024 Gozzano (NO) Italy
Tel. +39.0322.9545 | Fax +39.0322.863295 |
C.F e P.Iva. 00309260032 | corp. stock 928.800 I.V. | compagnie registration office 00309260032 | Rea MI1870445