SZ 101

External bath mixer with LONG LIFE flexible hose and adjustable anti-lime hand shower

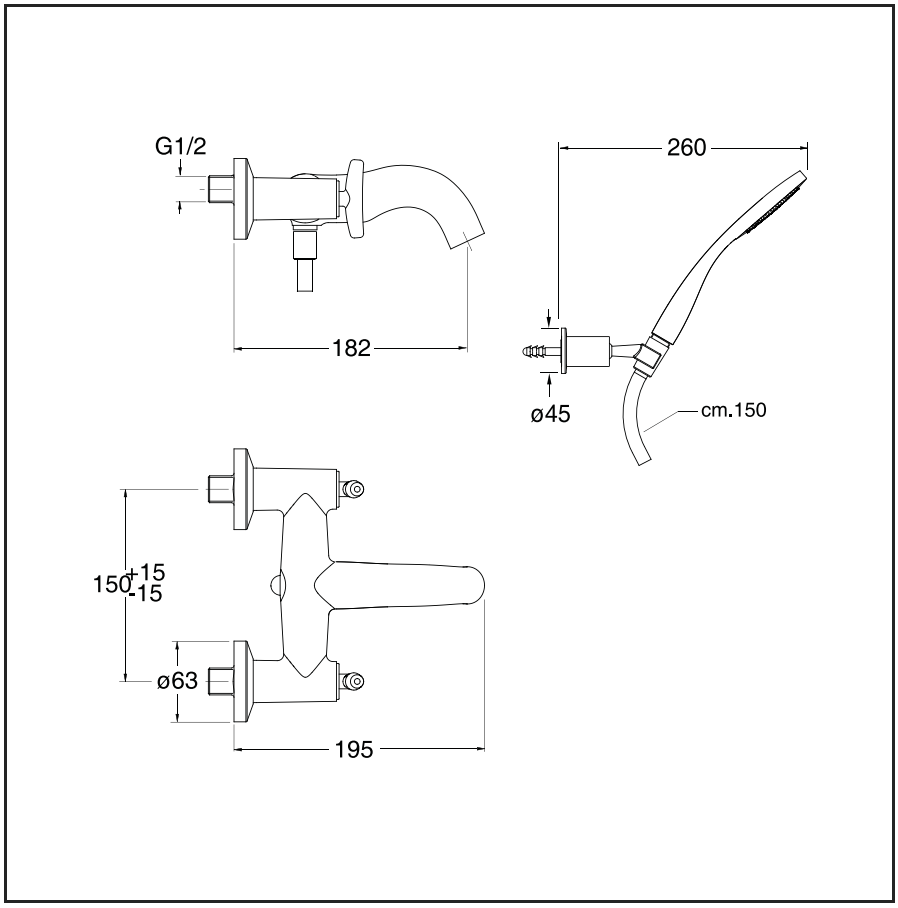

51 Chrome Plated

CERTIFICATIONS

Product available for the following certifications

ACS FR

BE