SL 230

1/2" "cold water" tap

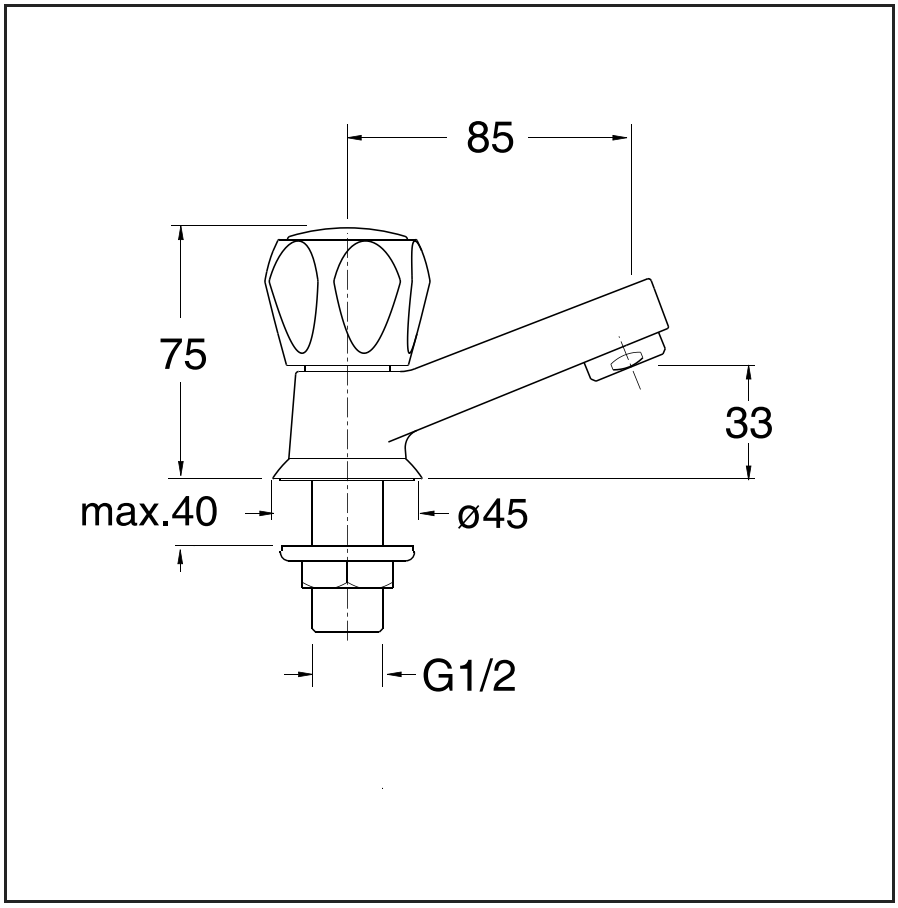

51 Chrome Plated

CERTIFICATIONS

Product available for the following certifications

ACS FR