TO 320

Bidet mixer with 1"1/4 Up&Down waste

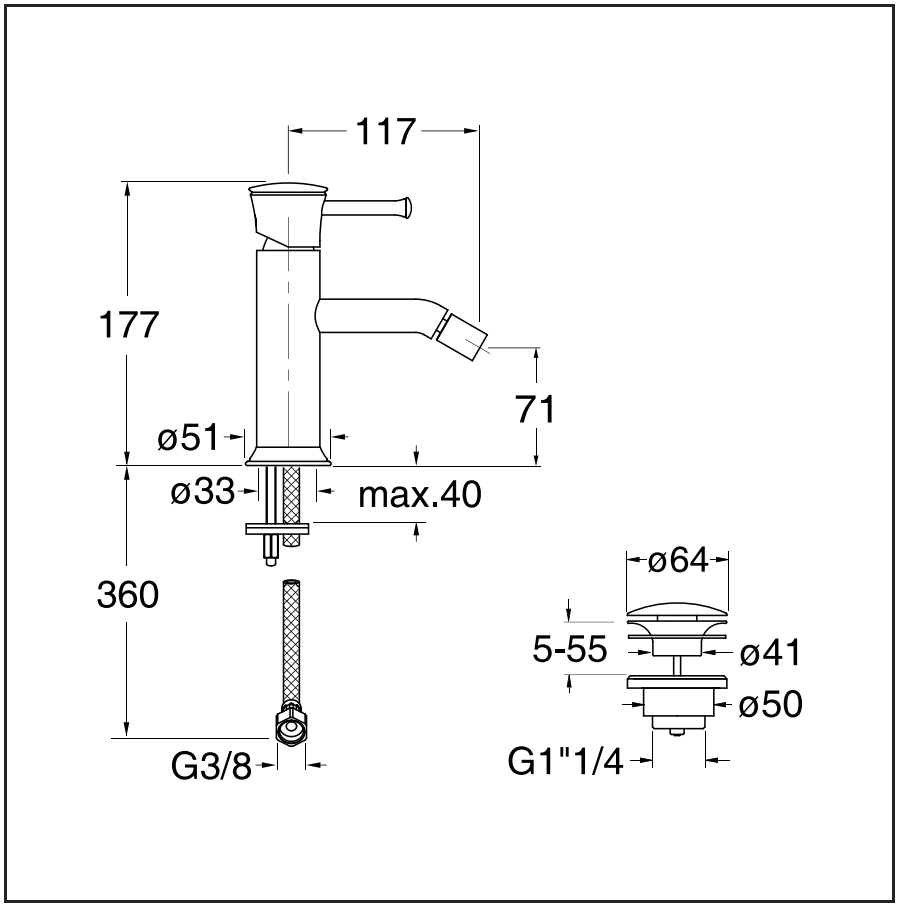

51 Chrome Plated

90 Silver

92 Old Brass

CERTIFICATIONS

Product available for the following certifications

ACS FR