TV 265

Basin mixer with wall mounted spout and 1"1/4 Up&Down waste

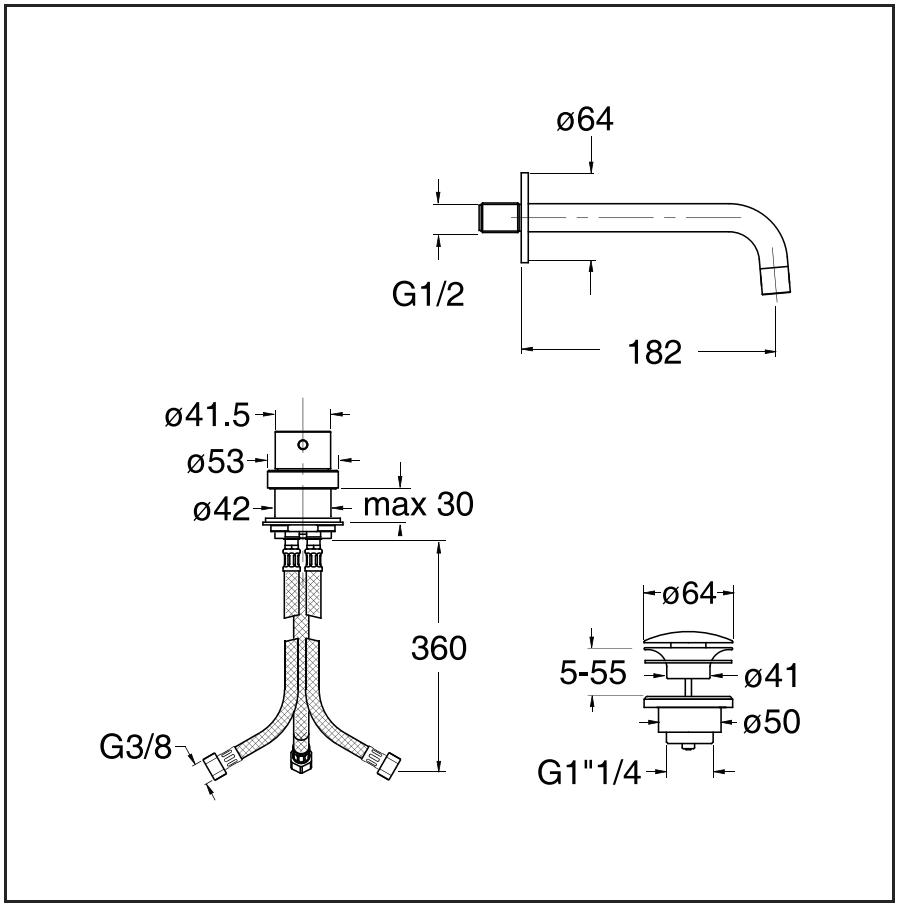

13 Black mat

24 White mat

51 Chrome Plated

CERTIFICATIONS

Product available for the following certifications

CRS SpA Via Principe Amedeo, 3 20121 Milano Italy | Headquarter Via Fava, 56 28024 Gozzano (NO) Italy
Tel. +39.0322.9545 | Fax +39.0322.863295 |
C.F e P.Iva. 00309260032 | corp. stock 928.800 I.V. | compagnie registration office 00309260032 | Rea MI1870445

09/29/2015