UC 636

Complete concealed shower mixer with metal plate

51 Chrome Plated

CERTIFICATIONS

Product available for the following certifications
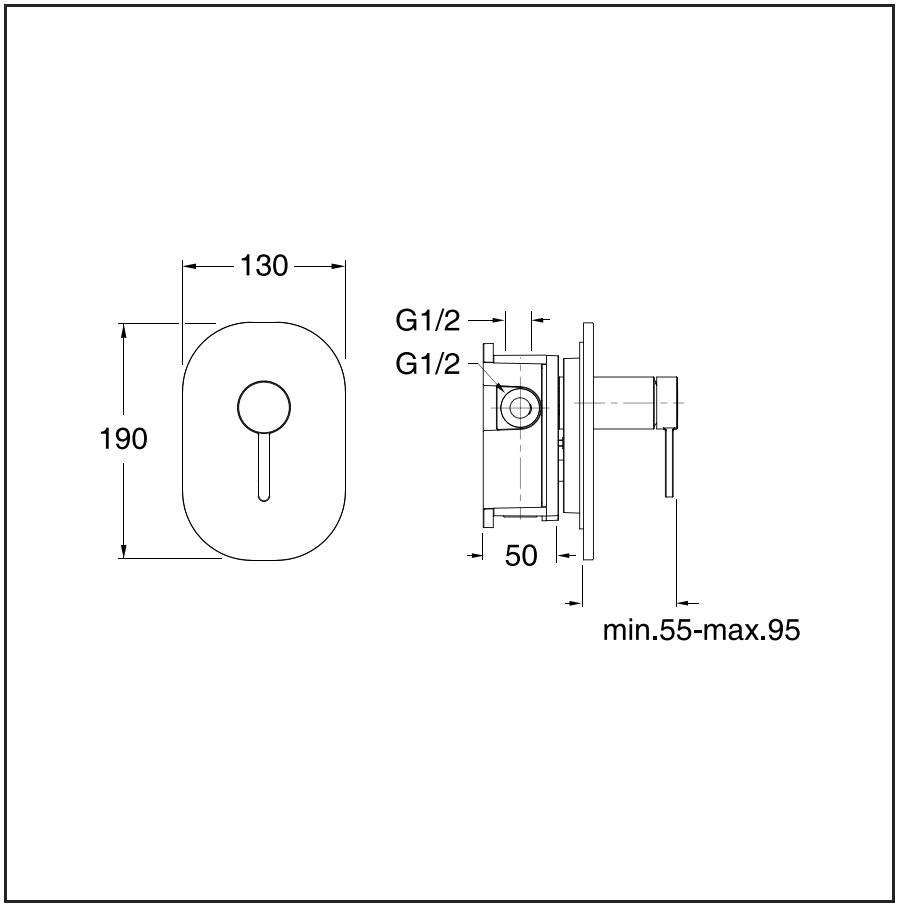
ACS FR