TECH SHEET
WASHBASINS VIEQUES
ACER0798P

Washbasins Vieques
ACER0798P

Patricia Urquiola, 2011

Over countertop washbasin

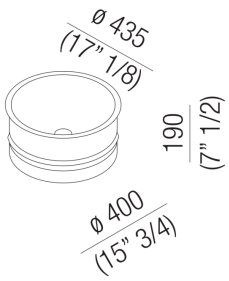

Finishes

Steel painted white
ACER0798P

Steel painted grey
ACER0798P

Round over countertop washbasin in steel painted white or in two colours, interior white and exterior dark grey (RAL7021), without tap hole and overflow. Can be accessorised with teak shelf to be insalled on the edge of the washbasin. Designed for waste .MET0563.
Materials used: Steel.

Height:	19.0 cm	7" 1/2 inches
Diameter:	43.5 cm	17" 1/8 inches
Weight:	7.0 kg	15 lbs
Packaging measurements:	52 x 52 x 25 cm	20"4/8 x 20"4/8 x 9"7/8 inches
Weight with packaging:	9.0 kg	20 lbs

Main dimensions

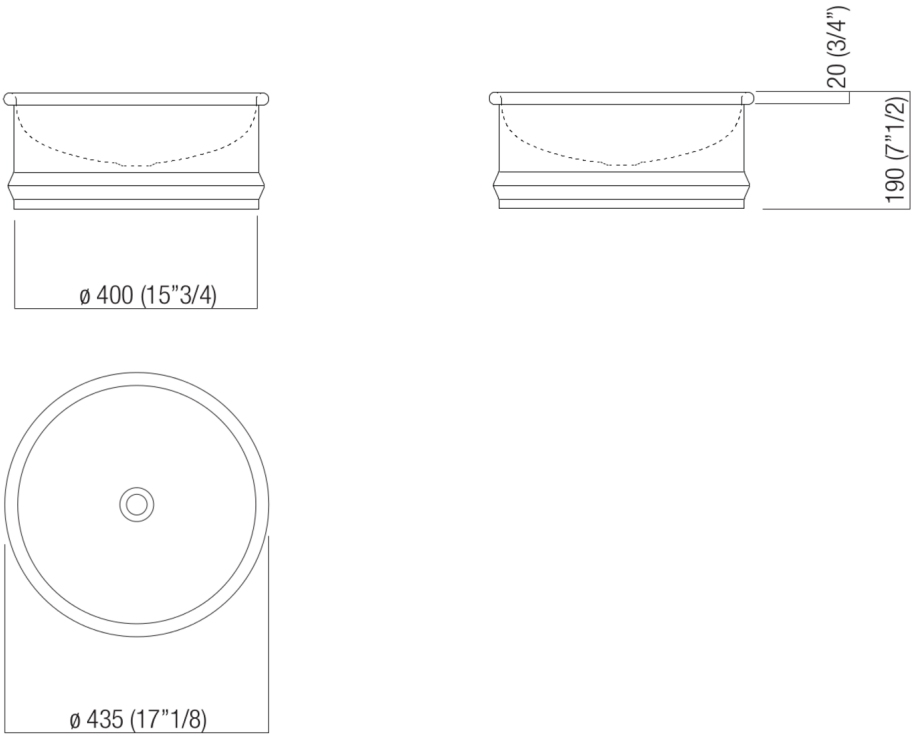

Installation notes: countertop to be rested on cabinet with thickness cm 3 (1"3/16)

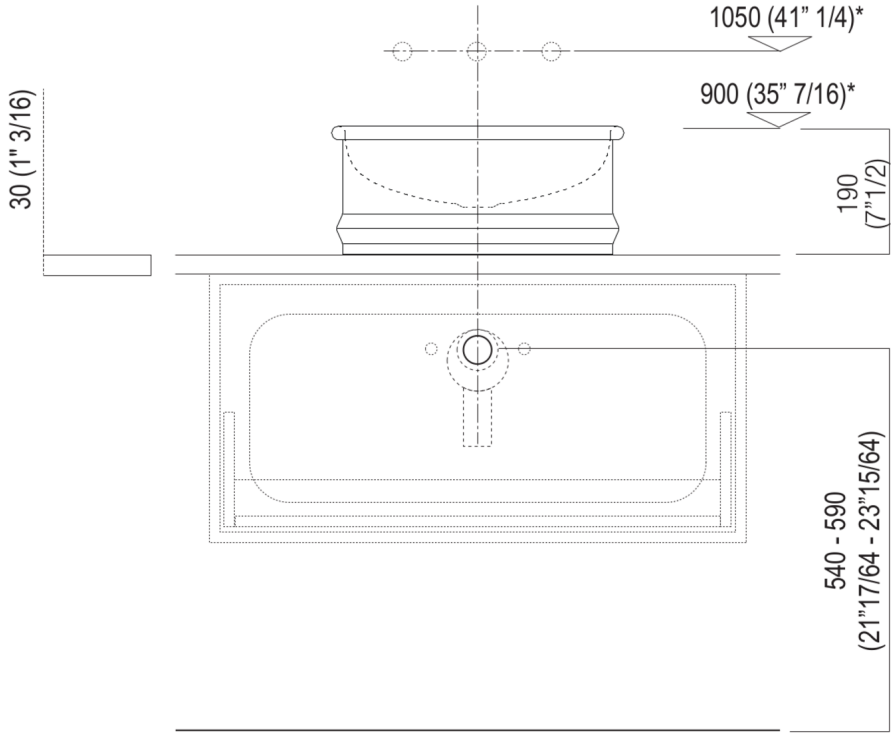

Scarico per sifone a bottiglia e ad incasso
Drain for bottle trap and concealed waste trap

*h.consigliata / advised h.

Installation notes: countertop to be rested on cabinet with thickness cm 6 (2"3/8)

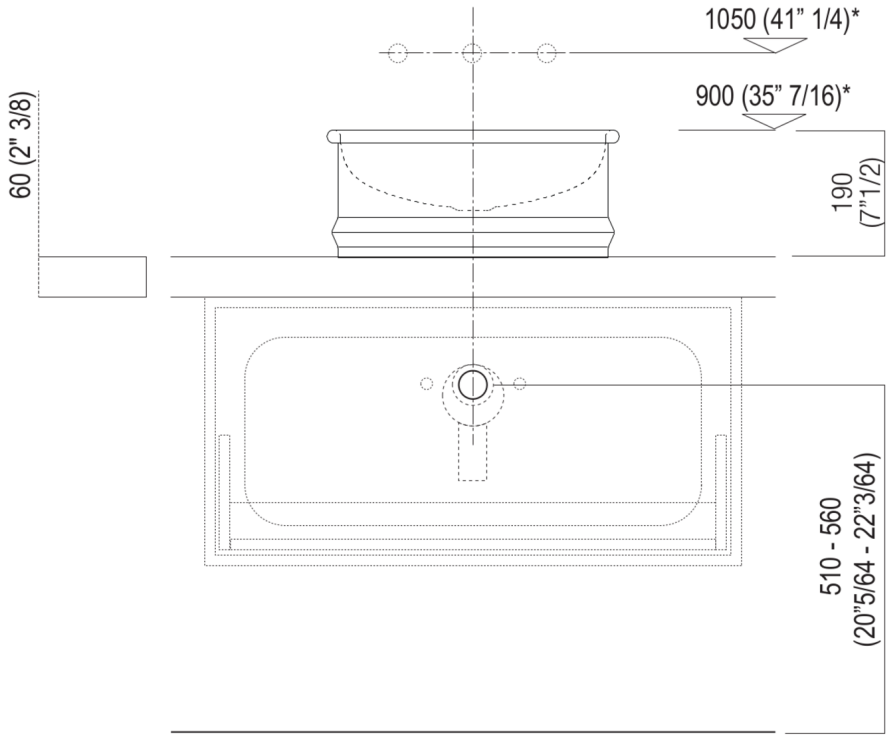

Scarico per sifone a bottiglia e ad incasso
Drain for bottle trap and concealed waste trap

*h.consigliata / advised h.

Installation notes: countertop with concealed wall fixings/freestanding with thickness cm 6 (2"3/8)

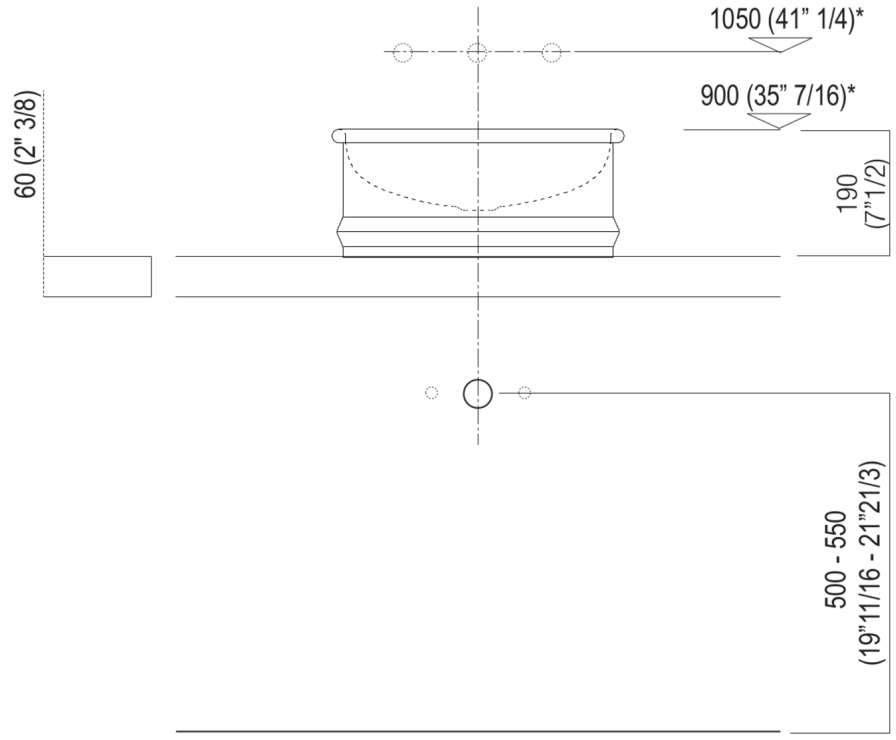

Scarico per sifone a bottiglia
Drain for bottle trap

*h.consigliata / advised h.

Installation notes: countertop with concealed wall fixings/freestanding with thickness cm 6 (2"3/8)

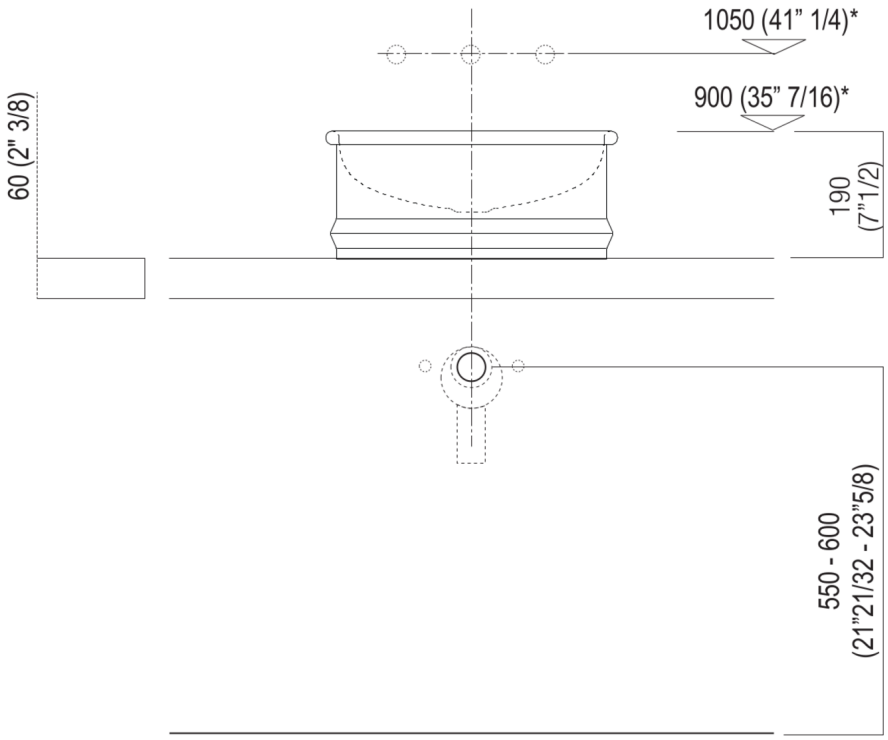

Scarico per sifone ad incasso
Drain for concealed waste trap

*h.consigliata / advised h.

Installation notes: countertop with concealed wall fixings/freestanding with thickness cm 12 (4"23/32)

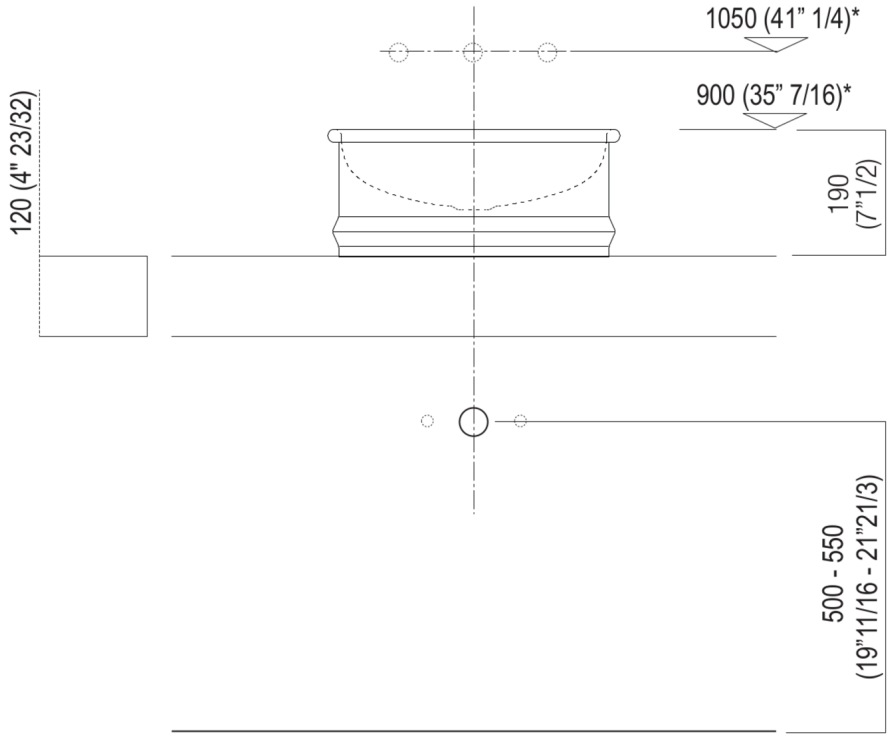

Scarico per sifone a bottiglia
Drain for bottle trap

*h.consigliata / advised h.

Installation notes: countertop with concealed wall fixings/freestanding with thickness cm 12 (4"23/32)

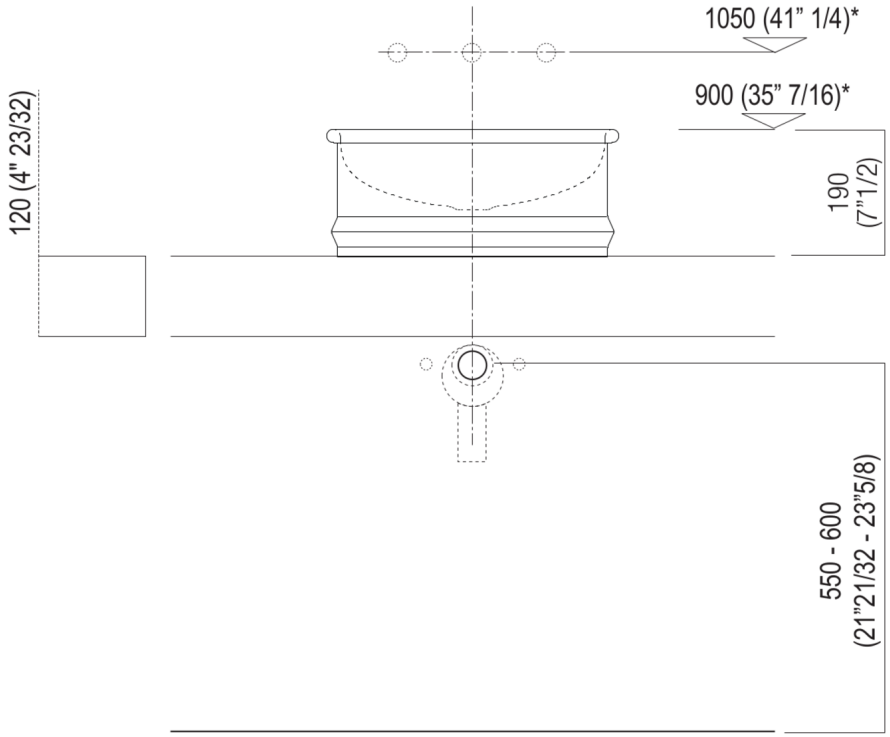

Scarico per sifone ad incasso
Drain for concealed waste trap

*h.consigliata / advised h.

Installation notes: countertop Evoluzione

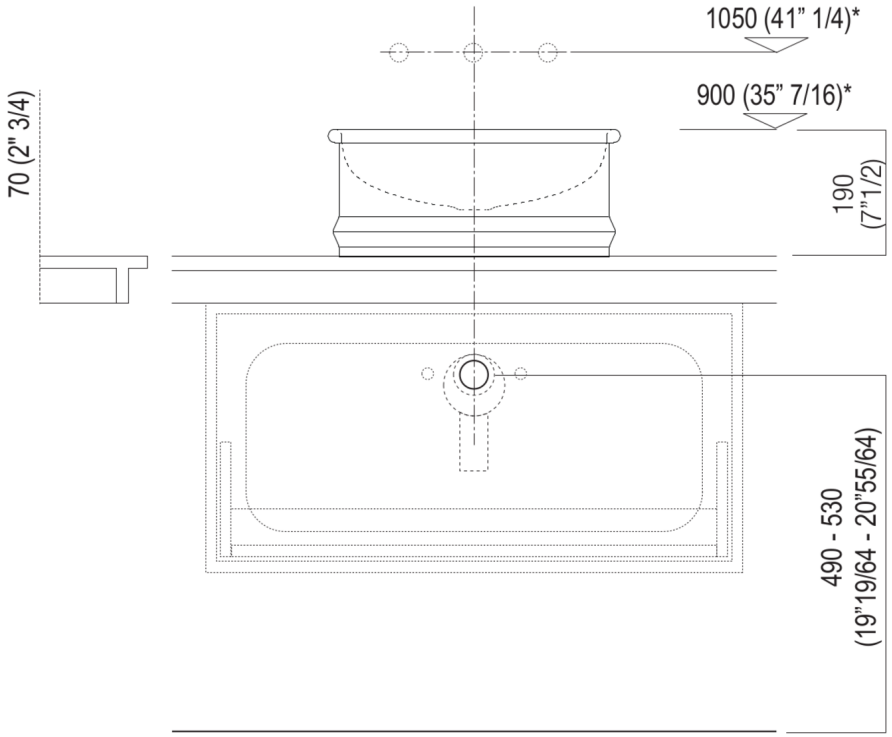

Scarico per sifone a bottiglia e ad incasso
Drain for bottle trap and concealed waste trap

*h.consigliata / advised h.

Holes for countertop washbasins and top mounted taps for top

PIANO cm 50 / COUNTERTOP cm 50

Posizione standard per rubinetto su piano
Standard position for top mounted tap

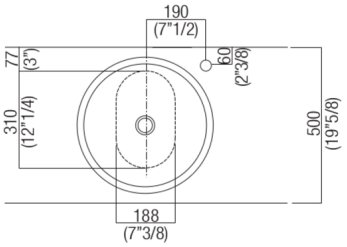

Posizione standard per rubinetto a parete
Standard position for wall mounted tap

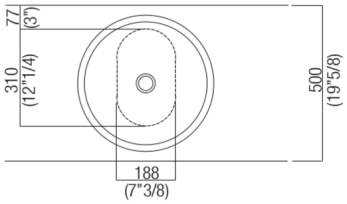

Posizione speciale per rubinetto Sen a parete e Square con bocca curva
Special position for wall mounted tap Sen and Square white curved spout

NON NECESSARIA
NOT NECESSARY

Tap position, recommended height

POSIZIONE RUBINETTERIA / TAP POSITION

Altezza consigliata / Recommended height

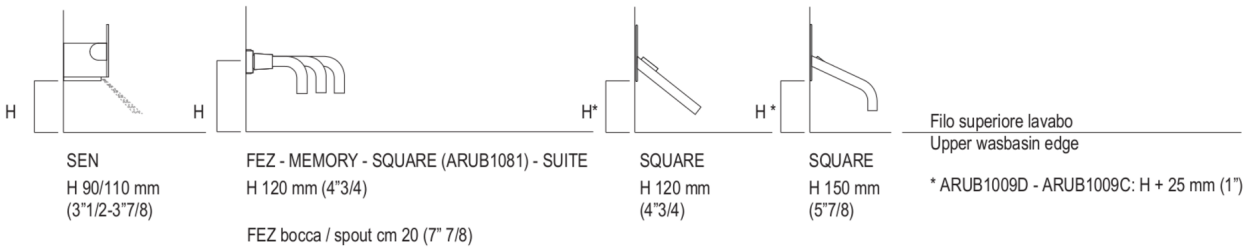

SEN
H 90/110 mm
(3"1/2-3"7/8)

FEZ - MEMORY - SQUARE (ARUB1081) - SUITE
H 120 mm (4"3/4)

FEZ bocca / spout cm 20 (7" 7/8)

SQUARE
H 120 mm
(4"3/4)

SQUARE
H 150 mm
(5"7/8)

* ARUB1009D - ARUB1009C: H + 25 mm (1")